PRELIMINARY
OPERATIONS MANUAL

SWAN MODEL SS-15, SS-100 AND SS-200

SINGLE SIDEBAND TRANSCEIVERS

SWAN
ELECTRONICS
A subsidiary of Cubic Corporation

305 Airport Road
Oceanside, CA 92054
Phone (714) 757-7525

10/73

FOREWORD

We know that you will enjoy your Ham equipment, described in this manual, for years to come. Many engineering hours have been spent to make this equipment the best that your money can buy. We recognize, however, problems do occur from time to time. In this respect, we would like to bring your attention to our liberal warranty policy as stated on the back cover of this manual. We also invite you to visit, call or write Swan Electronics or its authorized dealers.

TABLE OF CONTENTS

	Page
INTRODUCTION	1
SPECIFICATIONS	3
INSTALLATION	4
General	4
Selection of Transceiver Model and Options	4
RF Amplifier Connections	5
Power Source	6
Speaker	7
Cooling	8
Antenna	8
External VFO	8
Microphone	9
CW Key or Keyer Connection	9
External Relay	9
OPERATION	10
Control Functions	10
Initial Control Settings	16
Initial Power On	17
Calibration	17
WWV Reception	17
Noise Blanker	18
Transmit - SSB	18
Transmit - CW	18
"S" Meter Adjustment	19
CW Sidetone Volume Adjustment	19
External VFO	19
CIRCUIT THEORY OF OPERATION	20
General	20
Transceiver System	20
Receiver Circuits	20
RCVR MIXER	22
Noise Blanker	22
Filter Driver and Noise Switch	22
XTAL Filter	22
IF Amp	22
AGC/ALC	23
VFO	23
PROD DETECTOR	23
Carrier Osc.	23
Audio Amp	24
Crystal Calibrator	24
8 V Regulator	24
Transmitter Circuits	24
Speech Amp	24
Balanced Modulator	26
XTAL Filter	26
IF Amp	27
XMIT Mixer	27

Broadband Driver 27
Pre Drive 27
Driver 27
Low Pass Filter Assembly 27
ALC Directional Detector 27
SS-100 and SS-200 Amplifiers 28
VOX Control 28
Keyer 28
Sidetone Oscillator 28
Carrier Oscillator 28
Accessories 29

ILLUSTRATIONS

FIGURE	DESCRIPTION	PAGE
1	Model SS-15 - Rear View	5
2	Models SS-100 and SS-200 - Rear View	5
3	PWR Connector Wiring Diagram	7
4	Block Diagram - Receiver	21
5	Block Diagram - Transmitter	25
6	Crystal Filter Passband Graph	26

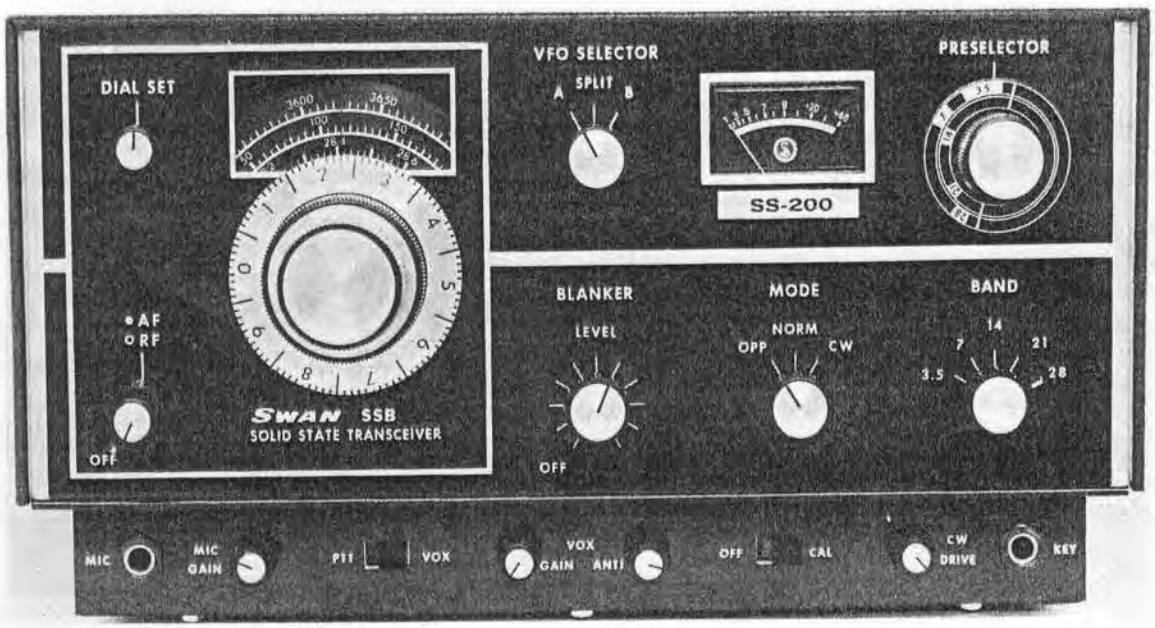

INTRODUCTION

The Swan Models SS-15, SS-100 and SS-200 Single Sideband Transceivers together with their optional equipment are designed to be used in the amateur radio bands 80, 40, 20, 15 and 10 meters either in the SSB or CW modes. These Swan transceivers are designed with the latest state-of-the-art solid-state circuits, and the construction includes Swan's superb craftsmanship, ruggedness and reliability. Many years of trouble free operation can be expected from these lightweight and durable units whether they are operated fixed station or mobile.

The SS-15 provides a power input of 15 watts P.E.P. and the SS-100 and SS-200 provide 100 and 200 watts P.E.P. respectively. The solid-state circuits in these transceivers provide for, among other things, broadband transmitter circuits that require no tuning, SWR protection from open to shorted antenna circuits, upper and lower sideband selection, semi-break-in CW operation with built-in monitor, VOX, a 25 KHz crystal calibrator with provisions for tuning in WWV, and external VFO connections with switching for split-frequency operation.

Added enjoyment will be realized through the usage of some of the optional equipment available for these transceivers. Those listed with the transceiver's specifications are recommended. Particular attention should be given to the power supplies if adequate DC power is not available.

The following sections of this manual provide information pertaining to installation, operation, circuit theory, trouble-shooting recommendations, and a parts list. Please refer to the Table of Contents for the listing of page numbers of specific information, illustrations and other pertinent information.

SPECIFICATIONS

SS-15, SS-100 AND SS-200 TRANSCEIVERS

Frequency Ranges . . . 80 meters 3.5– 4.0 MHz
40 meters 7.0– 7.45 MHz
20 meters 14.0–14.45 MHz
15 meters 21.0–21.45 MHz
10 meters 28.0–29.7 MHz
WWV Receive 10 MHz

Distortion . . . . . Down approx. -30 dB

Unwanted Sideband Suppression . . . . . Down more than 50 dB

Carrier Suppression. . . Greater than 60 dB

Transmitter Output . . Output impedance 50 ohm nominal, 2 to 1 typical.

Audio Sidetone . . . . . For CW monitoring

CW Keying . . . . . Equivalent to grid-block keying. Semi-break-in with VOX.

Calibration . . . . . 25 kHz marker

I.F. Selectivity . . . . . Crystal lattice filter with 2.7 kHz bandwidth, 1.7 shape factor.

A.F. Selectivity . . . . . Audio response essentially flat from 300 to 3000 Hz ± 3 dB. Audio output 4 watts with less than 10% distortion, to 3.2 ohm external speaker.

Receiver Sensitivity . . Less than 0.5 microvolts at 50 ohms impedance for signal plus noise to noise ratio of 10 dB.

Image Rejection . . . . Minimum -55 dB at 30 MHz, increasing to better than -75 dB at 3 MHz.

VSWR Protection. . . . When VSWR is 3:1 or more, will cut power by 20%. Under these conditions, will have infinite VSWR protection including open or short circuit.

Power Supply Requirements

SS-200 13.5 VDC (nominal) at 20 amps CW
Average 6 amps SSB Transmit
0.5 amps Receive

SS-100 13.5 VDC (nominal) at 11 amps CW
Average 3.5 amps SSB Transmit
0.5 amps Receive

SS-15 13.5 VDC (nominal) at 2 amps CW
Average 0.8 amps SSB Transmit
0.5 amps Receive

Power Input . . . . . **Model SS-200** – SSB, suppressed carrier: 200 watts P.E.P. minimum all bands. CW: 200 watts DC input on all bands.

Model SS-100 – SSB, suppressed carrier: 100 watts P.E.P. minimum all bands. CW: 100 watts DC input on all bands. RTTY/SSTV: 100 watts continuous.

Model SS-15 – SSB, suppressed carrier: 15 watts P.E.P. minimum on all bands. CW: 15 watts DC input on all bands. RTTY/SSTV: 15 watts continuous.

Dimensions

SS-15 . . . . . 12½" W x 6" H x 10¼" D
SS-100 . . . . . 12½" W x 6" H x 11½" D
SS-200 . . . . . 12½" W x 6" H x 12" D

Approximate Shipping Weight

SS-15 . . . . . 16 lbs.
SS-100 . . . . . 18 lbs.
SS-200 . . . . . 19 lbs.

INSTALLATION

GENERAL

The Swan SS-15, SS-100 and SS-200 transceivers are specifically designed for ease of installation and operation. A few basic considerations and steps are required during the installation process. Please review carefully the following installation information.

SELECTION OF TRANSCEIVER MODEL AND OPTIONS

The basic unit, SS-15, provides a power input of 15 watts P.E.P., and if additional power input is desired, consideration may be given to either the SS-100 (for 100 watts P.E.P.) or the SS-200 (for 200 watts P.E.P.).

These transceivers require a power source of 12 to 15 volts DC. It is important to note that different current requirements exist depending on which model is used, and specific voltage regulation requirements must be observed. In the case of the SS-200, the current requirement is 20 Amps. If an adequate voltage and current source is not available, consideration may be given for the use of one of Swan's power supplies. The PS-10 power supply provides the necessary power requirements for the SS-15 and SS-100, and the PS-20 can be used for all units. Following paragraphs in this section discuss specific voltage, current and voltage regulation requirements. Be sure to review this section.

Provisions have been made in the design of the transceiver for the use of an external VFO. The advantage for using a second VFO is the ability to work split-frequency. (Split-frequency operation is useful when it is desired to work foreign SSB DX stations outside the American phone bands and in some CW applications). Consideration may be given to the use of Swan's Model SS-208.

A number of accessory items are available for use with these three transceivers. It is recommended that you contact your Swan dealer or the Swan factory in Oceanside, California for additional information.

RF AMPLIFIER CONNECTIONS

The Model SS-15 contains the RF Amplifier inside the transceiver case. Proper installation involves only the connection of a coaxial jumper cable between the IN and OUT LINEAR AMP coax connector on the rear panel. (See Figure 1). Check to determine that this jumper is in place. If the jumper is missing or lost, one can be made from RG-58U.

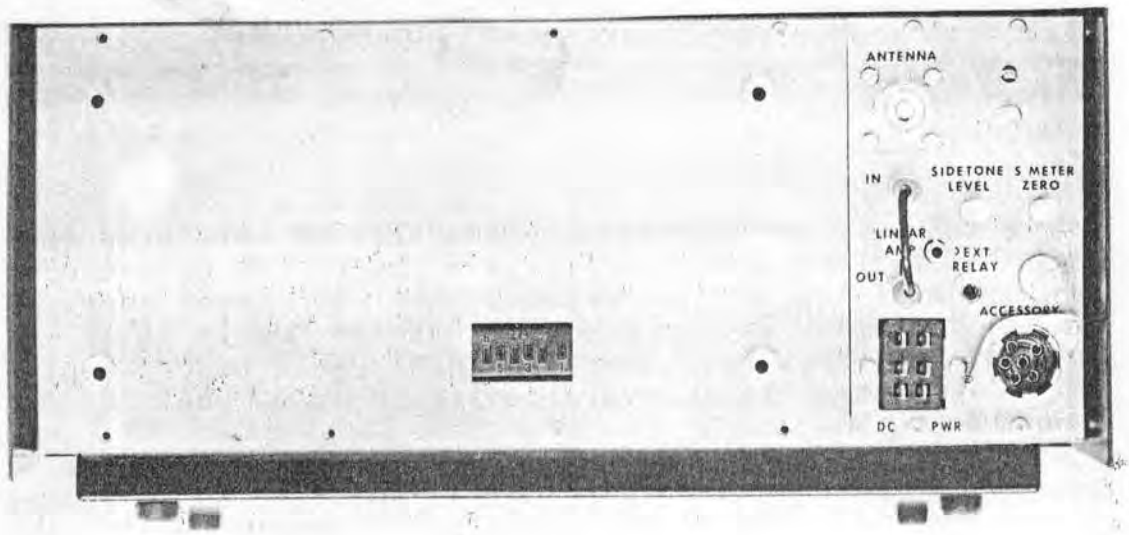

FIGURE 1

In either the Model SS-100 or SS-200, the RF Amplifier will be mounted on the rear panel of the transceiver. The input and output connections of the RF Amplifier are made using coaxial cables and connectors which are aligned with the IN and OUT LINEAR AMP connectors. (See Figure 2). Check to determine that these input and output connections are properly connected and seated in the rear panel connectors.

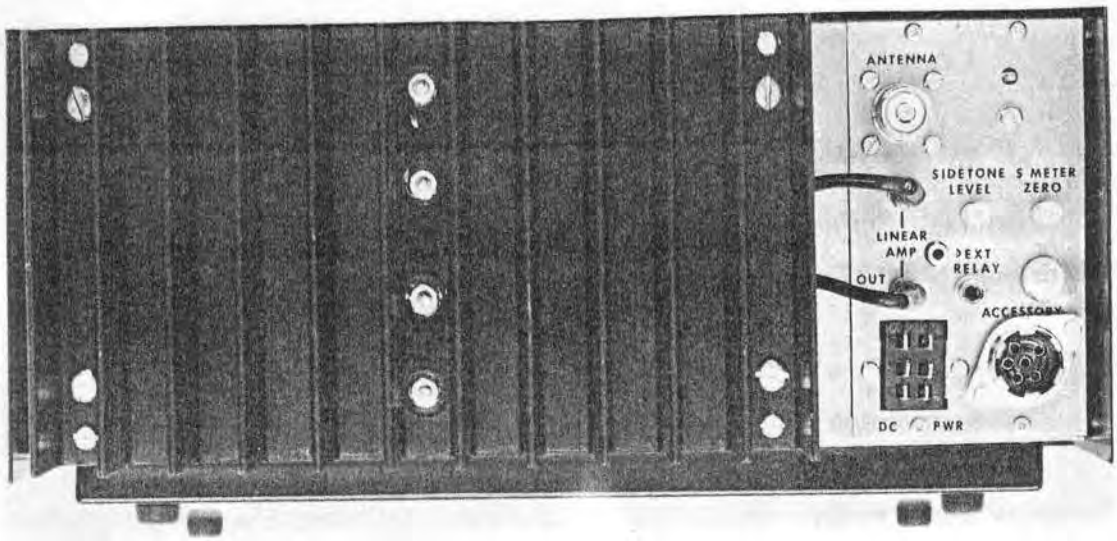

FIGURE 2

The transceiver can be modified from a SS-15 to either a Model SS-100 or SS-200 at any time following purchase. The SS-100 or SS-200 RF Amplifier is mounted in place on the rear panel, taking care that the power connector for the RF Amplifier is properly seated and connecting the input and output coax cables. (See Figure 2). The coaxial jumper cable used for the SS-15 must be removed. (If the jumper is left connected and a SS-100 or SS-200 RF Amplifier is mounted in place on the rear panel, the transceiver will operate as a SS-15 but will not give any ALC indication or control and can be easily overdriven causing distortion and possible permanent damage). The transceiver can also be modified from a SS-100 to a SS-200 by just replacing the RF Amplifier with the correct unit.

POWER SOURCE

When using a Swan power supply with the transceiver, plug the output cable from the power supply into the DC PWR connector on the rear panel of the transceiver. Connect the power supply AC cord to 120 VAC. It should be noted that the Models SS-15 and SS-100 transceivers require the Swan Model PS-10 power supply and the Model SS-200 transceiver requires a Swan Model PS-20 power supply.

A power supply or a battery source of 12 to 15 volts DC (negative ground) is required. Under no circumstance should the input voltage be allowed to exceed 15 volts. Unreliable transceiver performance may occur if the input voltage drops much below 12 volts. Voltage regulation at the DC PWR connector should be such that under full load the input voltage at the connector would be greater than 11 volts and with little or no load the input voltage would be no more than 15 volts. In order to obtain specified transceiver performance as listed in the transceiver's specification, 13.5 volts is required at the DC PWR connector at full load. It is recommended that full power output in the CW mode by used for full load during voltage regulation measurements. The following table provides the maximum current requirements for the three transceivers in various operational modes. The proper DC PWR connector voltage and speaker connections are shown in Figure 3.

	SS-15	SS-100	SS-200
Receive Current	500 MA	500 MA	500 MA
SSB Average Current	800 MA	3.5 Amp	6 Amp
SSB Peak Current	2 Amp	11 Amp	20 Amp
CW (Key Down)(Current)	2 Amp	11 Amp	20 Amp

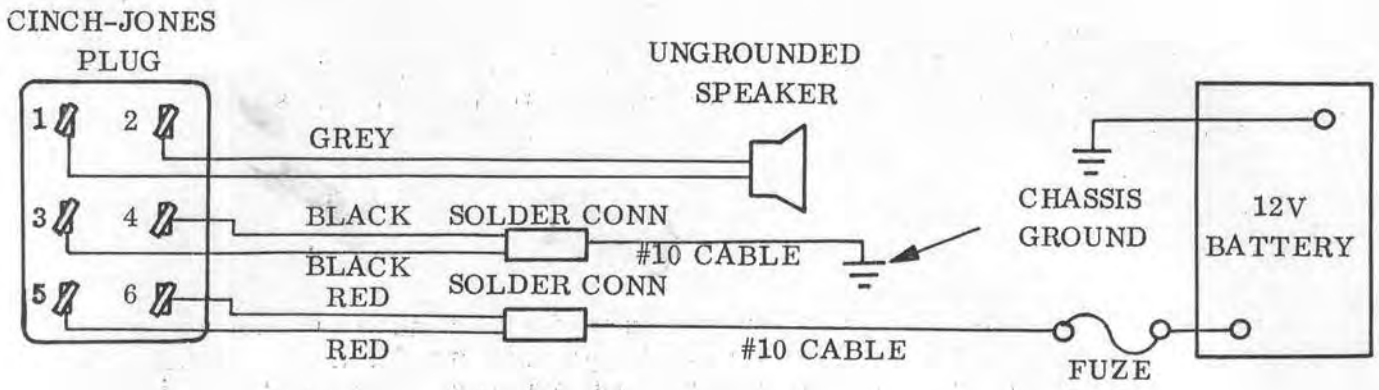

FIGURE 3

SPEAKER

A Speaker is provided in the Swan power supply cabinet and connection is accomplished through the DC PWR connector and power supply cable. When a Swan power supply is not used, a 4 to 8 ohm speaker is recommended. (Do not use a speaker or speaker combination which is less than 4 ohms as permanent damage to the audio amplifier can occur). Figure 3 shows the proper pin connection for the speaker on the DC PWR connector.

CAUTION

DO NOT ground either speaker lead. Audio talk-back during transmit and/or possible damage to the audio amplifier could occur. Following speaker hook-up, initially bring the audio level up gradually and listen for no audio or weak audio with distortion. If this is detected, look for a grounded speaker lead immediately.

COOLING

The transceiver should be placed in the operating area to insure the RF Amplifier heatsink at the rear of the transceiver is not blocked. Adequate ventilation must be maintained in this area to insure that the transistors in the linear amplifiers are not damaged. Cool operation of these transistors will insure greater life expectancy.

ANTENNA

The transceiver is designed to operate into a nominal 50 ohm resistive load, but it is protected against accidental opens or shorts in the antenna or high SWR. Operation into most loads within 2:1 SWR will be quite satisfactory. It should be noted that mobile antennas, particularly on the low frequency bands, often present mismatches greater than 2:1. Operation into loads with SWR's greater than 2:1 may be practical or useful under certain circumstances and in emergencies, but is not recommended for regular usage. Generally the higher the SWR, the lower the power output capability of the transmitter. In some cases the quality of the transmitted signal may also suffer as SWR is increased above 2:1. It is recommended that due consideration be given to antenna matching for simplest trouble free operation. For further discussion on the effects of high SWR, see the section on OPERATION under "meter".

It is recommended that the antenna be disconnected or switched to ground when the transceiver is not in use as a precaution against lightning.

Matching the transceiver's load impedance is also very import when an outboard linear amplifier is used. Be sure to check the SWR between the transceiver's output and the input to the linear amplifer. Keep it under 2:1 and as close to 1:1 as possible for best operation.

EXTERNAL VFO

The Model SS-208 External VFO is connected to the ACCESSORY connector on the rear panel. No other installation steps or procedures are required.

MICROPHONE

The microphone input circuit to the transceiver is designed for a high impedance microphone. A good quality high output crystal microphone with a push-to-talk switch is recommended. The microphone plug must be wired to mate with the MIC jack as shown on the schematic drawing.

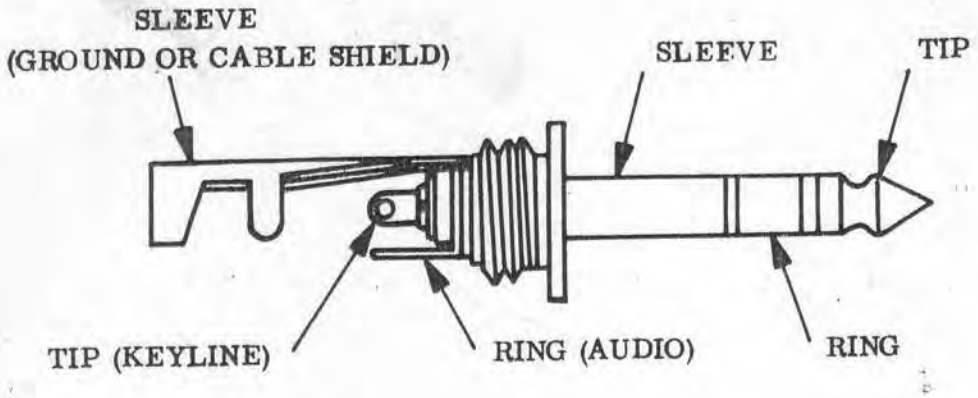

CW KEY OR KEYER CONNECTION

The CW keying circuits in the transceiver can be used with any key or keyer capable of withstanding +15 volts DC open circuit (key up) and an average current of 6 MA (key down). In using a keyer with solid-state output switching, be sure that the keyer output circuits can withstand the positive voltage and currents as stated above. Connect the key or keyer to the KEY jack on the transceiver's front panel.

EXTERNAL RELAY

The EXT RELAY connector on the rear panel provides a +12 to +15 volts DC during the time that the transceiver is in the transmit mode. This voltage connection can be used for any external relay application such as controlling an outboard linear amplifier. The current from this connection should not exceed one amp into the external relay or load.

THIS COMPLETES THE INSTALLATION. BEFORE TURNING POWER ON AND ATTEMPTING TO GET ON THE AIR, BE SURE TO READ AND STUDY THE BALANCE OF THIS MANUAL.

OPERATION

Successful operation of the Swan Models SS-15, SS-100 and SS-200 transceivers depends almost entirely on proper installation followed by a thorough understanding of the simple operational procedures offered in the following paragraphs. Review once again to determine that all of the installation recommendations made in the INSTALLATION section of this manual have been properly completed.

CONTROL FUNCTIONS

Before operating, review the following descriptions of the front, back and internal operator controls.

Front Panel:

Main Tuning — The main tuning knob changes the transceiver's operating frequency with a two speed control at a 36:1 ratio for slow speed and a 6:1 ratio for fast. The outer scale on the dial is calibrated for 3.5 to 4.0 MHz; and the inner scale is calibrated for 28.0 to 29.7 MHz. The center scale is calibrated for 40, 20 and 15 meters. It is necessary to add 7, 14 and 21 MHz to the readings of the center scale.

The outer edge of the tuning dial is a logging scale. It is intended to permit easy and rapid return to a frequency after a tuning search nearby. It is also useful in interpolating small frequency changes. The dial marks are very near 59 1 KHz for the middle main scale.

BAND — The BAND switch selects the 80, 40, 20, 15 and 10 meter bands. All tuned circuits, the VFO and low pass filters are selected.

AF and RF — These are dual gain controls. The AF (audio) is the small knob and also the power switch. Counterclockwise is the power off position and low audio. The RF control is the large knob and full clockwise position is maximum gain and the normal setting for proper "S" meter readings.

PRESELECTOR — The PRESELECTOR peaks the RF tuned circuits in the receiver. It should be set approximately to the markings corresponding to the selected band and then peaked for maximum signal. It should be noted that other settings could result in other responses. Suggestions are offered later in this section to show how these can be used to the operator's advantage.

NOTE

On 3.5 MHz and 7.0 MHz it is possible to tune the PRESELECTOR to the transceiver's IF frequency (5.5 MHz). The receiver would in effect be receiving its own local oscillator. This can be detected by a "hollow" sound to the speaker and some "S" meter indication.

MODE — The MODE switch selects the CW or SSB modes of operation. The NORM position selects the lower sideband for 80 and 40 meters, and the upperside-band for 20, 15 and 10 meters. The OPP position selects the opposite sideband from that noted above. CW selects the CW mode of operation.

VFO SELECTOR — The VFO SELECTOR switch is used in conjunction with the Swan Model SS-208 External VFO. The "A" position selects transceive operation of the internal VFO. The "B" position selects transceive operation on the external VFO, and SPLIT position selects the internal VFO during receive and the external VFO for transmit.

NOTE

If no external VFO is used or connected, the VFO SELECTOR switch must remain in position A. If the switch is positioned to either SPLIT or B either the transmitter or receiver will not function.

BLANKER — The BLANKER control establishes the threshold level for pulse type noise blanking. The switch in full counterclockwise disables the noise blanker circuit. The control is advanced clock-wise just to the point to suppress unwanted noise. Advancing the control too far clockwise may cause cross modulation by other strong signals on the band.

NOTE

If the crystal calibrator is turned on while the noise blanker is being operated, the receiver will be desensitized. This is caused because the noise blanker reacts to the crystal calibrator square wave output as if it were a noise pulse.

DIAL SET — The DIAL SET is used to calibrate the main tuning dial. This is done by using the internal 25 KHz crystal calibrator as a frequency standard.

MIC — The MIC jack is for microphone connection. It is not necessary to remove the microphone when operating CW.

MIC GAIN — The MIC GAIN controls the amount of audio from the microphone to the modulation circuit of the transceiver. Increase this control clockwise to the point that the meter occasionally kicks upward. Further clockwise increase will not cause increased modulation but will cause the ALC circuit to react to control transmitted output and prevent flat-topping.

METER — The meter indicates "S" units during receive and the ALC action during transmit. In transmit any upward movement of the meter indicates normal ALC action. An upward movement past S3 is an indication that the MIC GAIN or CW GAIN controls may be set too far clockwise. The ALC operation begins (indicated by upward deflection) when the forward RF output power reaches nominal (5 watts for the SS-15, 50 watts for the SS-100 and 100 watts for the SS-200) or when the reflected RF power reaches 25% of this nominal power.

The meter zero control is on the rear panel and the sensitivity control for "S" units is internal and factory adjusted.

A more detailed explanation of the meter's indications follows and may be useful for understanding some of the less frequently encountered conditions.

The ALC action at 25% reflected power means that at 3:1 SWR the maximum net power to the antenna will be 75% of nominal. At higher SWR's even less net power can be developed within the control limits set by ALC. This type of ALC control is necessary to protect the amplifier transistors and should not be altered in an attempt to increase output power.

For some load impedances presented to the amplifier it may not be able to quite reach nominal power and hence no indication will be seen on the meter. This can be accentuated by low supply voltage. For example, the maximum output capability characteristic of this type amplifier drops over 30% from 13.5 volts to 11.5 volts supply voltage.

Should the meter fail to indicate at maximum CW drive or microphone gain, operation may actually be normal, except for reduced power. The lack of indication may be due to either SWR or low supply voltage or both. Operation may be quite practical in these cases if other means to check the RF power output and quality are employed. In the absence of other means of checking, a good rule of thumb is to use the same settings of the CW DRIVE and MIC GAIN controls as were correct for nominal supply voltage and a 1:1 SWR.

CW DRIVE — Drive to the transmitter during CW operation is set by the CW DRIVE control. Increase this control clockwise to the point that the meter shows a slight upward movement during CW transmissions.

KEY — The KEY jack provides the connection for the key or keyer. The transceiver's design is such that it is not necessary to unplug the key or close the key circuit during SSB operation.

OFF - CAL — This switch controls the internal crystal calibrator. In the CAL position, the crystal calibrator is on and providing 25 KHz marker signals across each band.

PTT - VOX

The PTT - VOX switch controls the VOX circuitry. In the PTT position, the transceiver can be placed into transmit for SSB by depressing the microphone push-to-talk switch. During CW operations, the transceiver is placed into transmit by positioning the MODE switch to CW for each CW transmission. Placing the PTT - VOX switch in VOX enables the VOX circuitry and allows the transceiver to be switched to transmit in SSB by just speaking into the microphone or closing the key in CW.

VOX - GAIN

The sensitivity of the VOX circuit is adjusted by the VOX - GAIN control. It should be adjusted to the point where the transceiver transmits with a normal level of voice.

VOX - ANTI

The ANTI VOX controls the VOX circuitry so that the transceiver will not transmit when the microphone picks up audio from the transceiver's speaker. This control and the VOX GAIN control should be alternatley adjusted so that the transceiver transmits on audio from the voice but not from the speaker. Position the microphone to minimize its pick-up from the transceiver's speaker.

BACK PANEL:

"S" METER ZERO	The meter reading for "S" units is zeroed by this control with the antenna disconnected or the transceiver connected to a dummy load.
SIDETONE LEVEL	This control adjusts the level of CW sidetone heard in the speaker during CW transmissions.

INTERNAL CONTROLS:

Balanced Mod.	These controls adjust the null of the RF carrier. Recommendations are offered in the MAINTENANCE section for their proper adjustment.
VOX CW Delay	The length of time that the transceiver stays in transmit following the last CW character is adjusted by this control. This applies only to semi-break-in CW operation using the VOX circuitry.
VOX SSB Delay	The length of time that the transceiver stays in transmit following the last audio sound transmitted using VOX is adjusted by this control.
"S" Meter Sens.	The "S" meter sensitivity is factory adjusted. This control, located on the main circuit board, may be adjusted for a different setting or used to re-calibrate the "S" meter.

INITIAL CONTROL SETTINGS

Before turning power on, set all of the following controls as shown:

BAND	Desired band of operation
PRESELECTOR	Center of area marked for the selected band
VFO	A
MODE	NORM
BLANKER	Full counterclockwise
RF	Full clockwise
AF	Full counterclockwise
MIC GAIN	Full counterclockwise
VOX GAIN	Full counterclockwise
VOX ANTI	Full counterclockwise
CAL - OFF	OFF
CW DRIVE	Full counterclockwise
DIAL SET	In line with panel marking (12 o'clock)

CAUTION

Do not change bands when the transceiver is in the transmit mode.

INITIAL POWER ON

Turn power on with the AF control and advance the control until background noise is heard. Peak the PRESELECTOR within the band range for maximum noise. Connect an antenna to the transceiver and adjust the main tuning for a signal on the band. The transceiver is now fully operational for receiving signals.

Although the PRESELECTOR is normally adjusted for maximum signal (noise if no signal is present), it can also be used to reduce interfering signal splatter from very strong nearby stations by slightly de-tuning the control from maximum. With practice, this technique can be used very effectively. It should be noted that the "S" meter will not be accurately calibrated during the de-tuning of the control. This de-tuning process will have no effect on the transmitter.

CALIBRATION

Adjust the main tuning control to the nearest 25 KHz, 50 KHz or 100 KHz increment on the dial. Switch the crystal calibrator to CAL and adjust the DIAL SET control for a zero beat signal nearest the DIAL SET calibration mark on the front panel. It should be noted that on 10 meters it will be possible to find two or more calibration signals as the DIAL SET control is rotated. The 25 KHz and 75 KHz signals are about one "S" unit less than the 50 KHz and 100 KHz signals. When calibrating on 10 meters make a check using the "S" meter on the adjacent 25 KHz point to verify that the correct setting has been made.

WWV RECEPTION

From time to time it may be desired to check the accuracy of the internal crystal calibrator against WWV. The following tuning procedures can be followed for tuning in WWV at either 10 MHz or 15 MHz.

10 MHz: Set the BAND switch to 21, the main tuning dial to zero and adjust the PRESELECTOR for maximum signal at the 3.5 position. Minor retuning of the main tuning dial will bring in WWV.

15 MHz: Set the BAND switch to 3.5, the main tuning dial to 4.0 MHz and adjust the PRESELECTOR for maximum signal at the 28 position. Minor retuning of the main tuning dial will bring in WWV.

NOISE BLANKER

When noise is encountered, it may be possible to eliminate it by advancing the BLANKER level control clockwise. The balnker circuitry is very effective on ignition and other types of pulse noise but generally ineffective on some types of power line noise and atmospheric "static" on the lower bands. Optimum adjustment will be found through experience. If the BLANKER level control is advanced too far, cross modulation may occur. Some time spent experimenting under a variety of noise and band conditions will prove very worthwhile.

TRANSMIT - SSB

If not already done, perform the steps described in the Initial Control Settings and Initial Power On paragraphs of this manual section. Press the push-to-talk switch on the microphone and speak in a normal and natural tone of voice. Adjust the MIC GAIN control clockwise until the meter kicks upward on occasional voice peaks. This is the optimum gain setting. The transceiver is now ready for receive and transmitting SSB using PTT.

For VOX operation, position the PTT - VOX switch to VOX. Speak into the microphone in a natural tone of voice and adjust the VOX GAIN control until the transceiver goes into transmit. Stop talking and adjust the ANTI VOX control until the VOX circuitry does not react to sounds coming from the transceiver's speaker. Repeat the adjustments of the VOX GAIN and ANTI VOX until satisfactory VOX operation is achieved.

NOTE

No other operator adjustments are required involving the transmitter circuits. A small amount of audio "talk-back" is normal in SSB. If this is objectionable when using head phones add some attenuation ahead of the phones. There is enough audio power in receive to compensate if the gain is turned up.

TRANSMIT - CW

Position the MODE switch to CW, place the key down, and adjust the CW DRIVE control until the meter just begins to move upward. Return the MODE switch to Norm. The transceiver is now ready for CW operation. It will be necessary to position the MODE switch to NORM during receive and to CW for transmit.

To operate semi-break-in, position the PTT - VOX switch to VOX and the MODE switch to CW. Each time the key is placed down, the transceiver will switch from receive to transmit. The transceiver will return to receive in about 1/2 second following the last CW character. The delay in switching to transmit is so small that even at high speeds the first "dit" will be only slightly shortened.

CAUTION

In order to protect the RF Amplifiers and to insure long life of the RF Amplifier's transistors, DO NOT leave the transceiver in CW transmit with the key down for more than three minutes at a time. For applications requiring full power for longer periods, such as RTTY, a fan must be used to cool the heat sink temperature to 158 degrees F maximum. Measure the temperature at the transistor studs. A "whisper type" fan should work quite adequately in most cases.

"S" METER ADJUSTMENT

Proper adjustment of the "S" meter zero is accomplished by selecting 10, 15 or 20 meters and connecting the transceiver to a dummy antenna load or completely detuning the transceiver's PRESELECTOR control. (No noise or signal should be received so as to deflect the "S" meter). Adjust the S METER ZERO control on the rear panel for a zero "S" meter reading. Be sure that the adjustment is not to an extreme causing the meter needle to be forced against its zero stop. The sensitivity of the "S" meter reading is factory adjusted and requires a calibrated signal generator for its adjustment.

CW SIDETONE VOLUME ADJUSTMENT

The SIDETONE LEVEL control on the rear panel provides for a level adjustment of the CW sidetone heard in the speaker. Adjust this control for the desired audio level during the transmission of CW.

EXTERNAL VFO

When an external VFO is connected, select position A, B or SPLIT of the VFO SELECTOR for the desired mode of operation. (See the CONTROL FUNCTIONS paragraph for a description of these control settings). If no external VFO is connected, leave the VFO SELECTOR switch in position A.

THIS COMPLETES THE OPERATIONAL DESCRIPTION. YOU SHOULD NOW BE READY FOR ON-THE-AIR OPERATION IF DESIRED. IT IS RECOMMENDED THAT THE FOLLOWING CIRCUIT THEORY OF OPERATION SECTION OF THIS MANUAL BE STUDIED ALSO, SINCE A MORE THOROUGH KNOWLEDGE OF THE TRANSCEIVER CAN HELP YOU GET BETTER SERVICE AND ENJOYMENT FROM IT.

CIRCUIT THEORY OF OPERATION

GENERAL

The SS-15, SS-100 and SS-200 transceivers use all solid-state circuits. Many of the latest transistors and IC's are used and several new circuits, designed just for these transceivers, have been included. The development of the single sideband signal with suppressed carrier is achieved through the use of a balanced modulator and a crystal lattice bandpass filter. The following paragraphs of this section provide a detailed description of all systems and circuits. It is suggested that the schematic drawing at the end of this manual be opened for easy viewing during the reading of this section.

TRANSCEIVER SYSTEM

All circuit functions are integrated into a system which performs the transmit and receive functions. Figures 4 and 5 show block diagrams of the transmit and receive system. It should be noted that the asterisks on various blocks indicate that the circuits in that block are used for both transmit and receive. As an example, the VFO is a single circuit used for both transmit and receive.

RECEIVER CIRCUITS

The receive system is shown in Figure 4. The system is a single conversion superheterodyne receiver utilizing a product detector for SSB detection, an IF amplifier with a crystal filter at the input, a noise blanker circuit with a FET switch,and other standard superheterodyne circuits. Receiver circuits common to the transmitter are the VFO, AGC/ALC, crystal filter, IF amplifier, carrier oscillator and the 8 volt regulator. The following describes each circuit in the receiver.

RF AMP - The RF amplifier uses a dual gate MOSFET transistor Q205. The LC circuits are tuned at both the input and output of the amplifier using the PRESELECTOR control. The individual coils for each band are selected by the BAND switch. The amplifier is AGC controlled to reduce overloading and cross modulation.

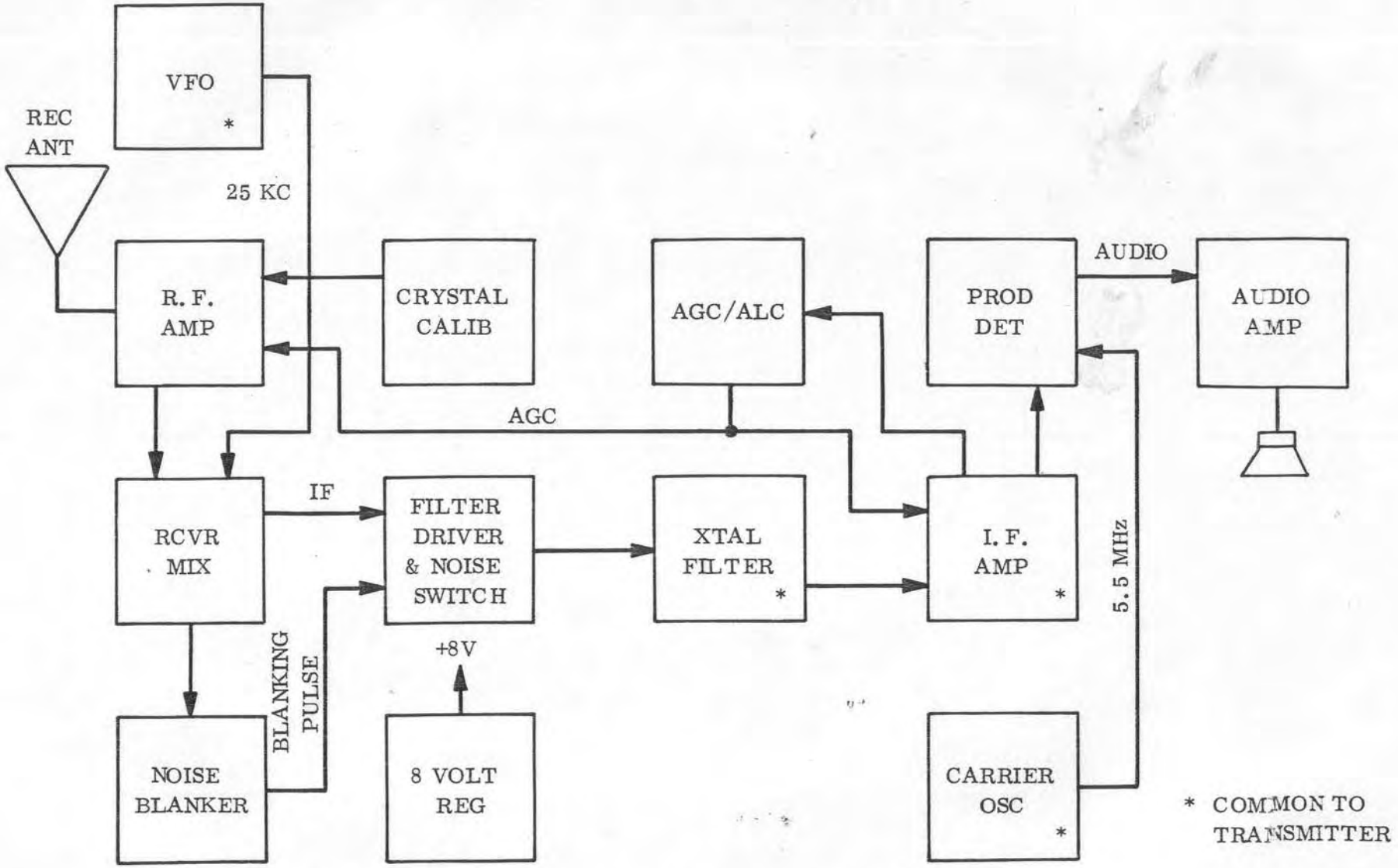

FIGURE 4. BLOCK DIAGRAM - RECEIVER

RCVR MIX - The receiver mixer amplifier also uses a dual gate MOSFET transistor Q206. The outputs from the RF amplifier and the VFO are mixed to convert the received RF signal to the IF frequency of 5.5 MHz. The VFO signal is switched and controlled by the VFO SELECTOR switch.

NOISE BLANKER - A portion of the receiver mixer output is connected to the noise blanker circuits. These circuits detect noise pulses and amplify and shape a blanking pulse. This blanking pulse is used by the FILTER DRIVER AND NOISE SWITCH (described in the following paragraph) to attenuate the unwanted noise ahead of the IF amplifier. The circuits included in the noise blanker are a dual gate MOSFET IF amplifier Q401, a FET pulse detector Q405 and a bipolar transistor pulse shaper and pulse driver Q406. The level established by the BLANKER LEVEL control allows the noise blanker to detect just the unwanted noise signals received.

FILTER DRIVER AND NOISE SWITCH - The blanking pulse, as described above, causes two balanced series connected FET transistors Q402 and Q403 to stop conducting. Since these two transistor circuits are connected in series with the IF signal, a 50 db attenuation of the IF signal is created each time the FET transistors stop conducting. The blanking pulse and the subsequent switching of the FET transistors is as fast as the unwanted noise pulse. The end result is complete attenuation of just a single noise pulse or a series of noise pulses. The wanted signals between the noise pulses (SSB or CW) are passed on to the IF amplifiers without attenuation. If the noise is short duration pulses with low percentage "on time", then the desired signals appear to the ear to be unaffected.

XTAL FILTER - The crystal filter narrows the IF passband to 2.7 KHz which is wide enough to allow reproduction of the human voice and narrow enough to filter adjacent frequency interference.

IF AMP - Two dual gate MOSFET transistors are used to make up the receiver IF amplifier system. The first IF amplifier Q407 is AGC controlled and a portion of its output is used to operate the "S" meter. The second IF amplifier Q408 is not AGC controlled but a portion of its output is used to develop the AGC voltage. It should be noted here that the first IF amplifier is also used in the transmitter and a description of its transmitter usage is found later in this section.

AGC/ALC - The AGC/ALC circuits are used to develop and apply the AGC and ALC control voltages. The AGC samples the output of the second IF amplifier and develops a negative voltage which is used to control the gain of the RF amplifier and the first IF amplifier. The purpose of the AGC is to maintain a nearly constant audio output level for a wide range of signal levels and to prevent overloading and cross modulation of the RF amplifier and IF amplifier due to strong signals received at the antenna. The RF GAIN control is located in the AGC system and it controls the start of AGC action by controlling the receiver's maximum RF gain. Since ALC pertains to the transmitter, it will be described later in this section.

VFO - The VFO is a three stage oscillator amplifier. The basic oscillator is a dual gate MOSFET Q301 followed by a FET Q302 and a bipolar Q303 transistor combination which provides high isolation, stability, and gain leveling. Each band has a separate LC circuit for individual bandspread tracking and temperature compensation. The VFO frequency is 5.5 MHz lower than the received frequency on 20, 15 and 10 meters and 5.5 MHz higher on 40 and 80 meters.

PROD DET - The product detector is essentially a mixer stage. It mixes the SSB IF signal frequency with the carrier oscillator frequency (the carrier oscillator is described later in this section). The resultant difference signal, from the sum and difference mixing, is the audio component of the received signal. The signal produced from the sum mixing is an RF signal and it is shunted to ground and not used. The transistor used for the product detector is a dual gate MOSFET Q410.

CARRIER OSC - The carrier oscillator is a crystal controlled oscillator amplifier Q107. Two crystals are provided for the control of upper and lower sideband. The 5.5 MHz crystal is selected by the NORM position of the MODE switch. In this position, the lower sideband is detected or generated on 80 and 40 meters and the upper sideband is selected on 20, 15 and 10 meters. The reason for the change from lower to upper sideband is the change from sum to difference mixing in both the receiver and the transmitter mixer stages. The 5.5033 MHz crystal is selected by the OPP position of the MODE switch. This shifts the carrier oscillator to the other end of the crystal filter causing a reversal of the sideband selected from that noted above. This oscillator is also used in the transmitter.

AUDIO AMP - The audio amplifier uses an integrated circuit and two power transistors Q701 and Q702. The maximum audio output is approximately 4 watts into a 4 ohm speaker load. The AF GAIN control on the front panel controls the level of audio at the input of the IC. A portion of the audio output is connected to the VOX circuitry for anti-vox control.

CRYSTAL CALIBRATOR - A bipolar transistor Q703 is used for the crystal oscillator amplifier. A 100 KHz crystal is used at the input to the oscillator amplifier and the output of the amplifier is followed by an integrated circuit which divides the 100 KHZ down to 25 KHz. The output is rich in harmonics up to 30 MHz and it is connected to the receiver input. Some of the 50 KHz flip-flop output is coupled into the receiver to enhance the 50 KHz markers.

8 V REGULATOR - A nominal 8 volts from the regulator is supplied to sensitive circuits such as the VFO, carrier oscillator, "S" meter and the microphone amplifier. The regulator consists of an integrated circuit.

TRANSMITTER CIRCUITS

The transmit system is shown in Figure 5. The system is similar to the receiver in that it is also a single conversion system. Some circuits used in the transmitter are also used in the receiver and they include the AGC/ALC, crystal filter, the first IF amplifier, VFO, carrier oscillator, and the 8 volt regulator. A description will not be given in this section for the audio amplifier, VFO and the 8 volt regulator since the description offered earlier is adequate for this section. The following describes the remaining transmitter circuits.

SPEECH AMP - The low level voltage coming from the microphone is amplified and the frequency response shaped by the speech amplifier. The mic preamplifier is a FET transistor Q101 and it is followed by a highly stable integrated circuit feedback amplifier. A portion of the output from the mic preamplifier is used by the VOX circuitry through the VOX GAIN control. The MIC GAIN control is at the input to the integrated circuit.

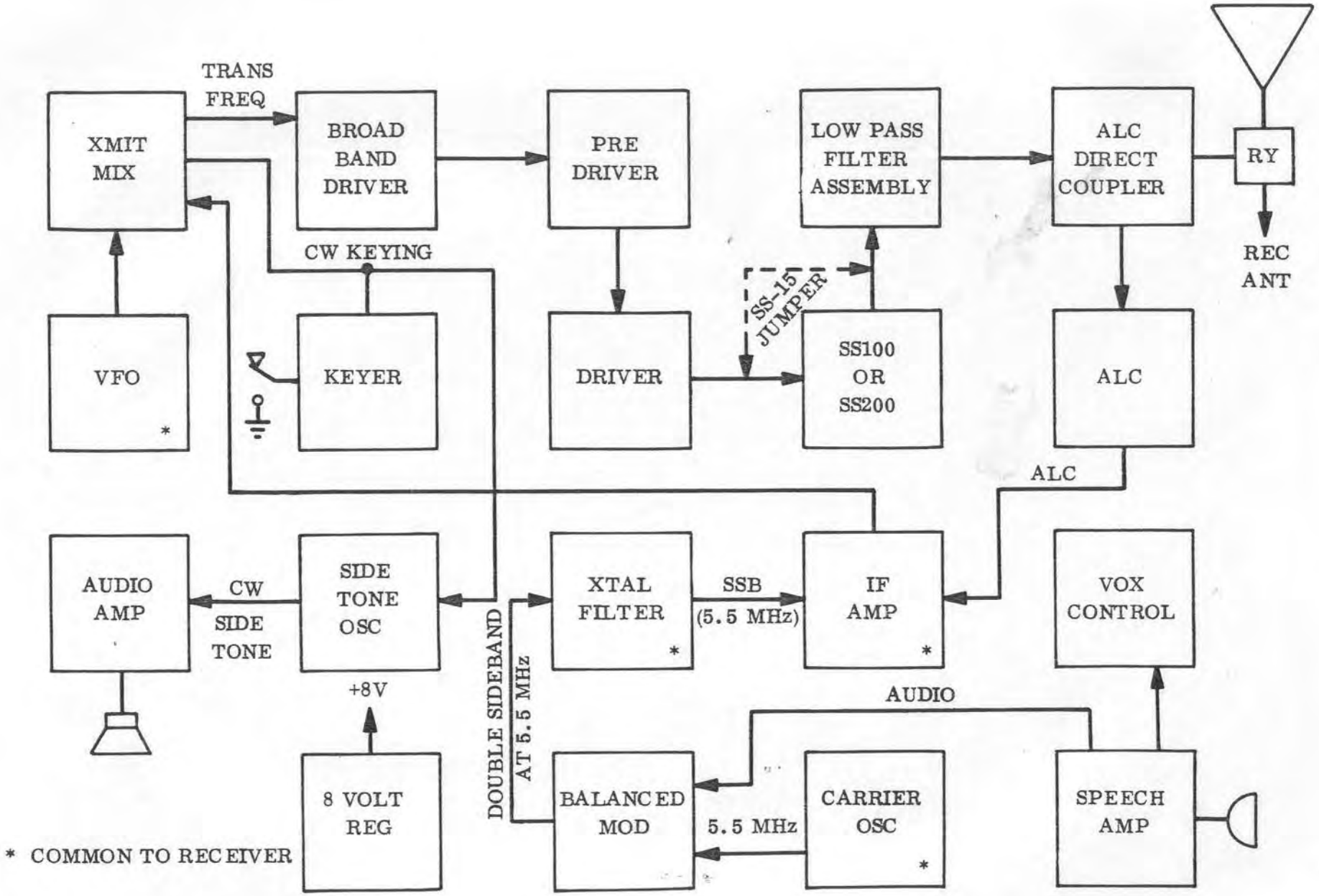

FIGURE 5. BLOCK DIAGRAM TRANSMITTER

BALANCED MODULATOR - A four diode ring modulator is used for the balanced modulator. The two inputs to the balanced modulator are the carrier oscillator output and either the audio output from the speech amplifier or DC from the CW drive. When balanced, no output of any kind is present at the modulator's output transformer. When audio is present at its input, the output of the balanced modulator is a double sideband signal without an RF carrier. If CW is being transmitted, the CW DRIVE control unbalances the modulator causing an RF carrier at the output.

XTAL FILTER - The crystal filter narrows the IF passband to 2.7 KHz. The filter is used to select the desired sideband which is positioned in the filter passband by selecting a 5.5000 MHz (NORM) carrier frequency on the lower skirt of the selectivity or a 5.5033 MHz (OPP) carrier frequency on the upper skirt. Figure 6 shows typical selectivity curves including those for both the standard and SS16B Swan filters.

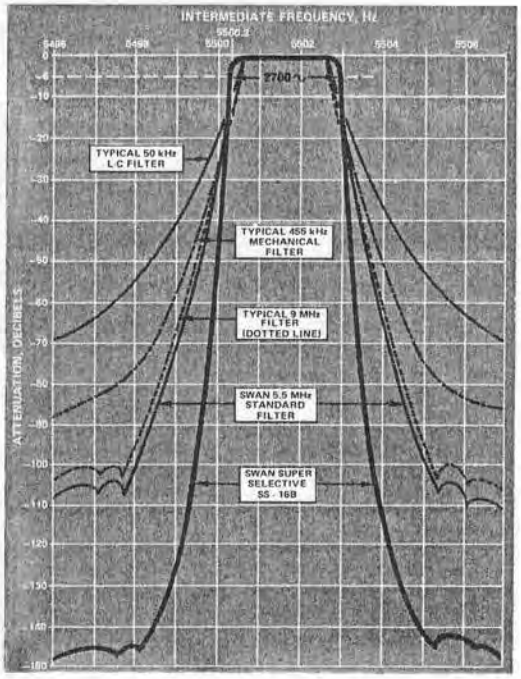

FIGURE 6

IF AMP - The first IF amplifier is a dual gate MOSFET transistor amplifier Q407. The amplifier is controlled by ALC during transmit to insure that other amplifier circuits are not overdriven. The "S" meter is still connected to the first IF amplifier as it is during receive, but the meter reading during transmit is an indication of ALC action. When the meter moves off of zero, the ALC circuit is reacting and it is an indication that the normal forward power output or 25% (of normal) reflected power has occurred.

XMIT MIX - The transmitter mixer is an integrated circuit. The output of the mixer produces the desired RF output frequency by mixing the output from the first IF amplifier and the VFO output. The voltage to the mixer is keyed through a transistor and RC shaping network when operating CW.

BROADBAND DRIVER - A single transistor Q202 is used as a preliminary linear amplifier. Although it contains LC tuned circuits it is a broadband amplifier (on the selected band) requiring no adjustment or tuning by the operator.

PRE DRIVER - Another broadband amplifier provides additional amplification of the transmit signal. A FET transistor Q203 is followed by transistor Q204. Both of these transistor amplifiers operate Class A linear.

DRIVER - The driver amplifier is the RF output amplifier for the SS-15 and is the driver amplifier for the SS-100 and SS-200. Three bipolar transistors are used as linear amplifiers to produce approximately 5 watts RF output.

LOW PASS FILTER ASSEMBLY - Although the transistor amplifiers are very linear, they still produce harmonic multiples of the fundamental frequency. The low pass filter is required to keep these harmonics 50 db or more below the desired fundamental. A different low pass filter is used for each band and is selected by the BAND switch. In cases where TVI is a problem, a good low pass TVI filter is recommended.

ALC DIRECTIONAL DETECTOR - The directional detector serves several functions. First it provides the control voltage to protect the transistor linear amplifiers. Either full rated power output in a forward direction or 25% of full rated power in a reflected direction causes the directional detector to activate the ALC and reduces the drive power. In this way the transceiver is fully protected for antenna shorts, opens or severe mismatch. Second, the directional detector provides the control voltage to the ALC so that the ALC can be adjusted (at the factory) to limit maximum RF output. This is done to preserve linear operation in the RF amplifiers. Increased drive from the microphone gain or CW drive will result in increased ALC action but not an increase in RF power output.

SS-100 AND SS-200 AMPLIFIERS - Both the SS-100 and SS-200 external linear amplifiers use special high power bipolar matched transistors and they are stud mounted to large heat sinks. These amplifiers are broadband (3 to 30 MHz) and are capable of excellent linearity (third order IMD products better than -30db).

VOX CONTROL - The VOX circuit utilizes an integrated circuit feedback amplifier and three bipolar transistors Q103, Q104 and Q105. The integrated circuit amplifies the audio received from the MIC PRE AMP and is adjusted for proper level by the VOX GAIN control. The VOX CONTROL transistor Q103 provides further amplification of the VOX signal but it also provides the adjustments for ANTI-VOX and delay (for both voice and CW). When VOX operation is not selected by the VOX - PTT switch, the VOX CONTROL transistor Q103 is turned off and transistor Q104 is operated directly from the microphone push-to-talk circuit. Transistor Q105 provides transmit relay switching voltage. It should be noted that separate controls are used for CW and voice delay adjustments.

KEYER - The keyer circuit is a bipolar transistor switch Q201 that operates from the external key or keyer and controls the on/off operation of the transmit mixer (XMIT MIX) stage. The design of the keyer provides for shaping of the rise and fall characteristics of the CW wave. This is done to minimize keyed bandwidth and still permit clean and crisp keying at high CW speeds. The shaper circuit also provides a smoothing effect to minimize the effects of contact bounce.

SIDETONE OSCILLATOR - The sidetone oscillator is an RC phase shift type using one bipolar transistor Q409. It is enabled and keyed in the CW mode only. Its output is filtered to produce a good clear note that is connected to the speaker audio amplifier. The level of output is adjustable from the back panel and the frequency is internally controlled by the RC constants.

CARRIER OSCILLATOR - Although the carrier oscillator circuit was described earlier in this section, it should be noted here that the carrier oscillator's output frequency is shifted upward approximately 800 Hz from the normal 5.500 MHz when transmitting CW. This is done to allow the frequency of the carrier oscillator to fall within the passband of the crystal filter.

ACCESSORIES

PS-20 Power Supply . . Designed primarily for the SS-200, the PS-20 supplies 13.5 VDC (nominal) at 20 amps for all three solid-state models

PS-10 Power Supply . . Supplies 13.5 VDC (nominal) at 10 amps for solid-state models SS-100 and SS-15

SS-208
External VFO . . . . . Plugs directly into all three solid state models for split frequency operation.

SS-16B Filter . . . . . 16 pole Super Selective Crystal Lattice Filter with 2.7 kHz bandwidth, 1.28 shape factor. Replaces standard filter.

WM-1500 IN-LINE WATTMETER

Frequency Range . . . 2.0 to 30.0 MHz, may be used up to 50 MHz with slightly reduced accuracy.

Design Impedance . . . 50 ohm

Power Ranges . . . . . (A) 0 to 5 watts (Forward and reverse)
(B) 0 to 50 watts (Forward and reverse)
(C) 0 to 500 watts (Forward and reverse)
(D) 0 to 1500 watts (Forward and reverse)

Meter . . . . . Reads forward or reverse power in watts

Accuracy . . . . . Better than ± 10% of full scale

Directivity . . . . . Better than 30 dB

Insertion VSWR . . . . 1.05:1 or less

Dimensions . . . . . 6-1/2" High x 4-3/4" Wide x 6-3/4" Deep (Includes mounting feet, knobs and RF connectors)

Weight . . . . . 2-3/4 pounds

RF Connectors . . . . . Two SO-239 connectors on rear panel

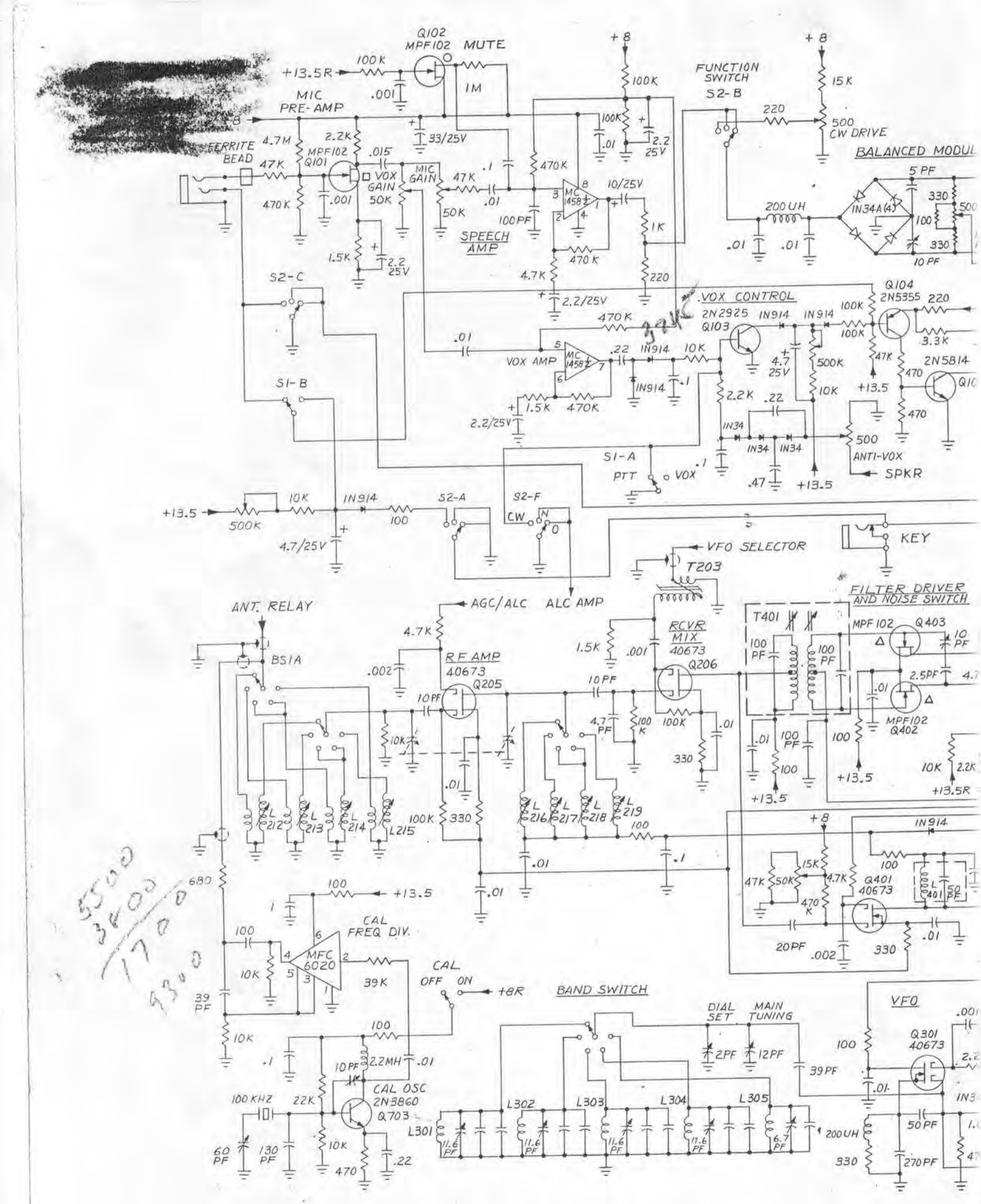

Q102
MPF102
MUTE
+13.5R
100K
.001
1M
MIC
PRE-AMP
+8
33/25V
FERRITE
BEAD
4.7M
2.2K
MPF102
Q101
.015
VOX
GAIN
50K
MIC
GAIN
47K
.1
.01
470K
470K
.001
1.5K
2.2
25V
SPEECH
AMP
100PF
MC
1458
10/25V
1K
470K
4.7K
2.2/25V
220
FUNCTION
SWITCH
S2-B
220
15K
500
CW DRIVE
BALANCED MODUL
5 PF
200 UH
IN34A(4)
330
100
10 PF
S2-C
VOX CONTROL
2N2925
Q103
IN914
Q104
2N5355
3.3K
VOX AMP
.22
10K
4.7
25V
500K
47K
2N5814
470
+13.5
S1-B
1.5K
2.2/25V
2.2K
IN34
500
ANTI-VOX
SPKR
S1-A
PTT
VOX
.47
+13.5
+13.5
500K
10K
IN914
100
S2-A
S2-F
CW
4.7/25V
KEY
VFO SELECTOR
T203
ANT. RELAY
AGC/ALC
ALC AMP
FILTER DRIVER
AND NOISE SWITCH
BS1A
4.7K
RF AMP
40673
Q205
.002
10PF
RCVR
MIX
40673
Q206
1.5K
.001
T401
MPF 102
Q403
10 PF
2.5PF
MPF102
Q402
10K
2.2K
+13.5R
L212
L213
L214
L215
100K
330
L216
L217
L218
L219
100
+8
IN914
15K
47K
50K
4.7K
470K
Q401
40673
20PF
.002
680
100
+13.5
CAL
FREQ DIV.
MFC
6020
10K
39K
39
PF
CAL
OFF
ON
+8R
BAND SWITCH
DIAL
SET
MAIN
TUNING
2PF
12PF
39PF
VFO
Q301
40673
2.2MH
CAL OSC
2N3860
Q703
100 KHZ
22K
60
PF
130
PF
470
.22
L301
L302
L303
L304
L305
11.6
PF
6.7
PF
200UH
50PF
270PF
330
5500
3800
1700
9300

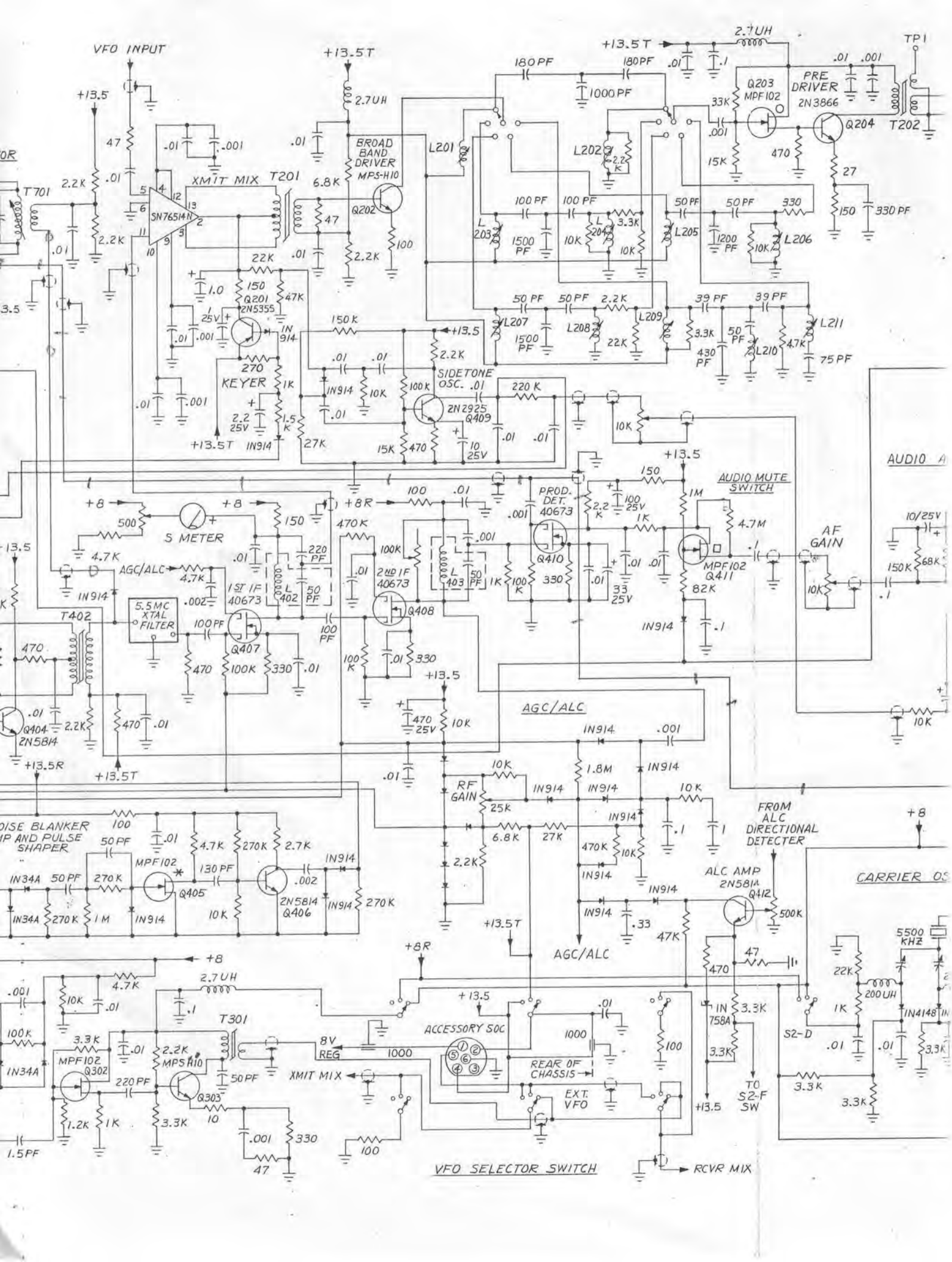
VFO INPUT
+13.5
+13.5T
2.7UH
180 PF
180PF
1000 PF
+13.5T
2.7UH
TP1
PRE DRIVER
2N3866
Q204
T202
Q203 MPF102
33K
15K
470
27
150
330 PF
.01
.001
47
2.2K
XMIT MIX T201
SN76514N
T701
BROAD BAND DRIVER MPS-H10
Q202
6.8K
100
L201
L202
2.2 K
100 PF
1500 PF
L 203
L 204
3.3K
10K
L205
1200 PF
L206
50 PF
330
22K
150
47K
Q201 2N5355
IN 914
1.0
25V
150 K
+13.5
2.2K
270
KEYER
1K
1.5 K
2.2 25V
IN914
+13.5T
27K
SIDETONE OSC.
IN914
10K
100K
2N2925 Q409
220 K
15K
470
10 25V
L207
L208
L209
L211
L210
39 PF
430 PF
4.7K
75 PF
AUDIO MUTE SWITCH
PROD. DET. 40673
Q410
2.2 K
100 25V
150
1M
4.7M
MPF102 Q411
AF GAIN
10/25V
150K
68K
10K
S METER
500
+8
+8R
100
470K
AGC/ALC
4.7K
220 PF
1ST IF 40673
L 402
50 PF
5.5MC XTAL FILTER
T402
100 PF
Q407
2ND IF 40673
Q408
L 403
100K
330
33 25V
82K
IN914
.1
470
100K
330
.01
Q404 2N5814
2.2K
+13.5R
+13.5T
AGC/ALC
470 25V
10K
IN914
.001
1.8M
RF GAIN
25k
6.8K
27K
2.2K
470K
10K
FROM ALC DIRECTIONAL DETECTER
ALC AMP 2N5814 Q412
500K
47K
.33
+13.5T
AGC/ALC
+8
CARRIER OS
NOISE BLANKER AMP AND PULSE SHAPER
100
50 PF
270K
2.7K
IN34A
MPF102
Q405
130 PF
.002
2N5814 Q406
1 M
+8
+8R
4.7K
2.7UH
T301
ACCESSORY SOC
+13.5
1000
100
8V REG
XMIT MIX
REAR OF CHASSIS
EXT. VFO
IN 758A
3.3K
TO S2-F SW
+13.5
5500 KHZ
22K
200 UH
1K
IN4148
S2-D
MPF102 Q302
Q303
MPS H10
220 PF
50 PF
1.2K
10
1.5PF
47
VFO SELECTOR SWITCH
RCVR MIX

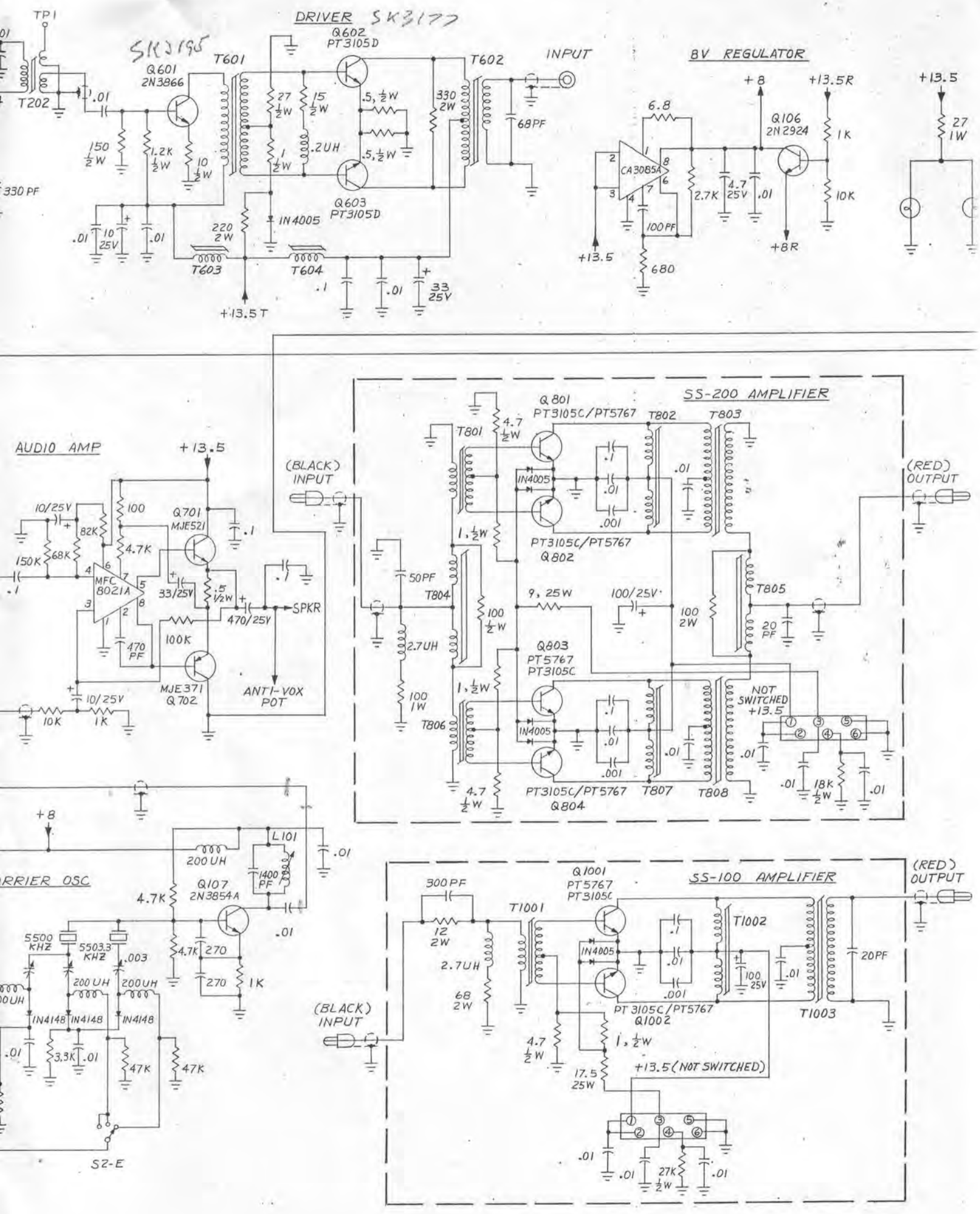
DRIVER SK3177
SK3195
TP1
T202
.01
Q601
2N3866
T601
Q602
PT3105D
Q603
PT3105D
T602
INPUT
150 ½W
1.2K ½W
10 ½W
27 ½W
15 ½W
1 ½W
.2UH
.5, ½W
.5, ½W
330 2W
68PF
330 PF
.01
10 25V
.01
220 2W
IN4005
T603
T604
.1
.01
33 25V
+13.5T
8V REGULATOR
+8
+13.5R
6.8
Q106
2N2924
1K
CA3085A
2.7K
4.7 25V
.01
10K
100PF
+13.5
680
+8R
+13.5
27 1W
AUDIO AMP
+13.5
10/25V
100
Q701
MJE521
.1
82K
68K
4.7K
150K
.1
MFC 8021A
33/25V
.5 ½W
470/25V
SPKR
100K
470 PF
MJE371
Q702
ANTI-VOX POT
10/25V
10K
1K
(BLACK) INPUT
SS-200 AMPLIFIER
Q801
PT3105C/PT5767
T802
T803
T801
4.7 ½W
IN4005
.1
.01
.001
.01
PT3105C/PT5767
Q802
1, ½W
50PF
T804
9, 25W
100/25V
100 ½W
100 2W
T805
20 PF
2.7UH
100 1W
Q803
PT5767
PT3105C
1, ½W
T806
IN4005
.1
.01
.001
.01
NOT SWITCHED +13.5
.01
18K ½W
.01
4.7 ½W
PT3105C/PT5767
Q804
T807
T808
(RED) OUTPUT
+8
L101
200 UH
1400 PF
.01
RRIER OSC
Q107
2N3854A
4.7K
.01
5500 KHZ
5503.3 KHZ
.003
4.7K
270
270
1K
200 UH
200 UH
IN4148
IN4148
IN4148
.01
3.3K
.01
47K
47K
S2-E
SS-100 AMPLIFIER
Q1001
PT5767
PT3105C
300PF
T1001
T1002
12 2W
2.7UH
68 2W
IN4005
.1
.01
.001
100 25V
.01
20PF
PT 3105C/PT5767
Q1002
T1003
(BLACK) INPUT
4.7 ½W
1, ½W
17.5 25W
+13.5 (NOT SWITCHED)
.01
.01
27K ½W
.01
(RED) OUTPUT

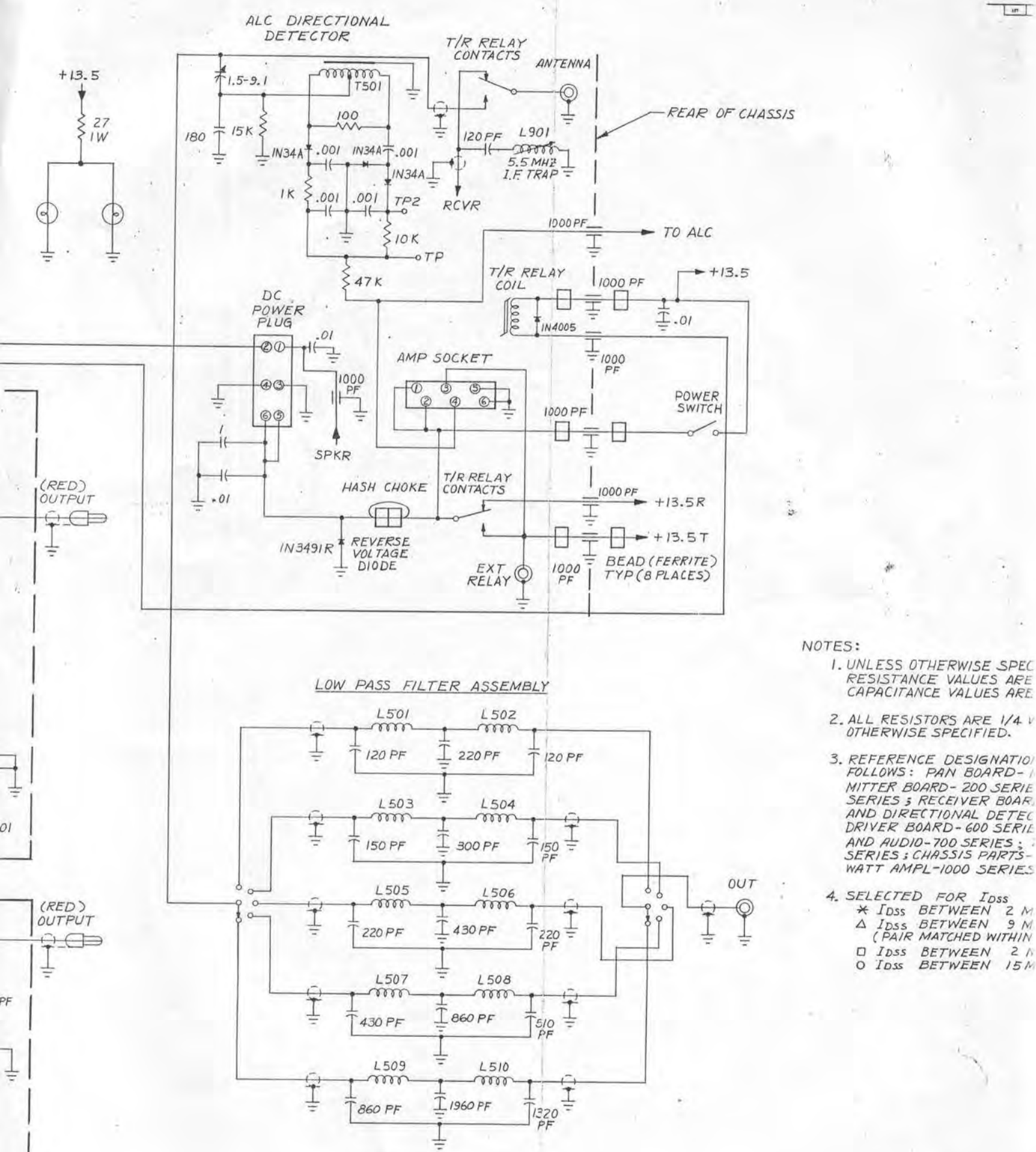

NOTES:

1. UNLESS OTHERWISE SPEC
   RESISTANCE VALUES ARE
   CAPACITANCE VALUES ARE
2. ALL RESISTORS ARE 1/4 V
   OTHERWISE SPECIFIED.
3. REFERENCE DESIGNATIO
   FOLLOWS: PAN BOARD-
   MITTER BOARD- 200 SERIE
   SERIES; RECEIVER BOAR
   AND DIRECTIONAL DETEC
   DRIVER BOARD- 600 SERI
   AND AUDIO-700 SERIES;
   SERIES; CHASSIS PARTS-
   WATT AMPL-1000 SERIES
4. SELECTED FOR I_{DSS}
   * I_{DSS} BETWEEN 2 M
   Δ I_{DSS} BETWEEN 9 M
   (PAIR MATCHED WITHIN
   □ I_{DSS} BETWEEN 2
   ○ I_{DSS} BETWEEN 15 M

ITEM	DWG. NO.	DESCRIPTION
TOLERANCES & NOTES EXCEPT AS NOTED		SCHEM. SS-15 SOLID
DR. BY AJG 7/3/72		MATERIAL & SPEC.
CHKD. BY		SWAN ELECT
APP. BY		417 VIA DEL MONTE
APP. BY		

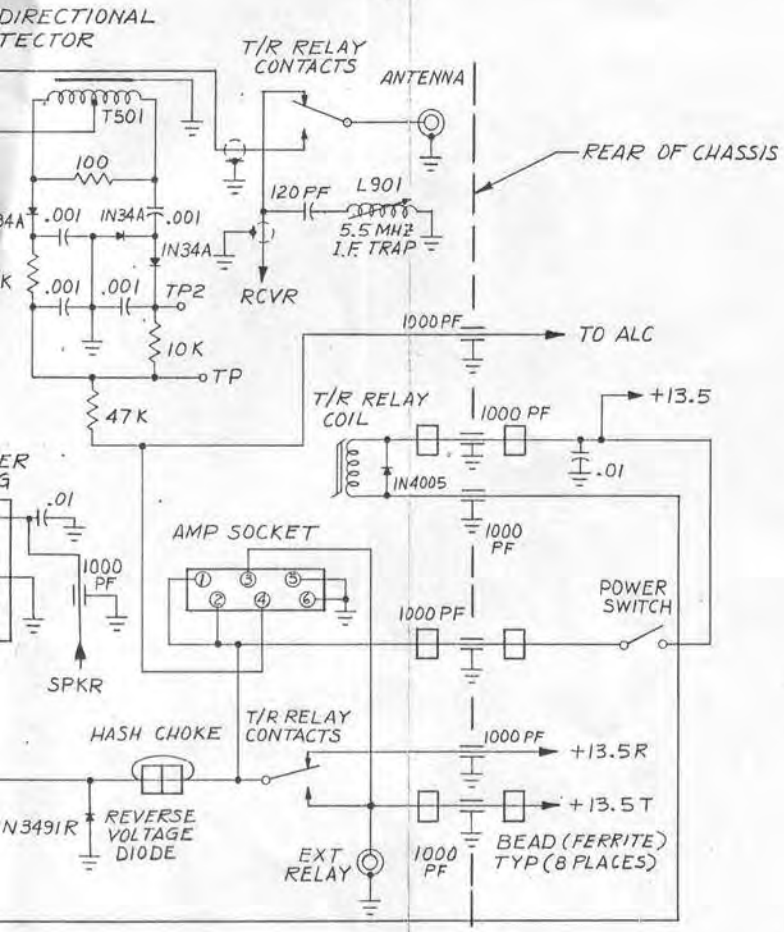

LOW PASS FILTER ASSEMBLY

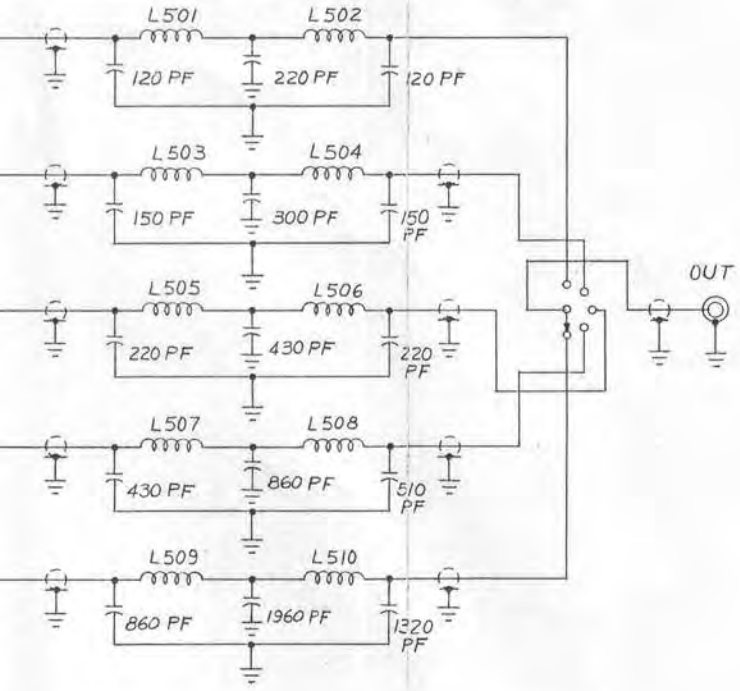

NOTES:

1. UNLESS OTHERWISE SPECIFIED RESISTANCE VALUES ARE IN OHMS. CAPACITANCE VALUES ARE IN MICROFARADS.
2. ALL RESISTORS ARE 1/4 WATT, 5% UNLESS OTHERWISE SPECIFIED.
3. REFERENCE DESIGNATIONS USAGE IS AS FOLLOWS: PAN BOARD - 100 SERIES; TRANSMITTER BOARD - 200 SERIES; VFO BOARD - 300 SERIES; RECEIVER BOARD - 400 SERIES; FILTER AND DIRECTIONAL DETECTOR - 500 SERIES; DRIVER BOARD - 600 SERIES; BALANCE MOD. AND AUDIO - 700 SERIES; 200 WATT AMPL - 800 SERIES; CHASSIS PARTS - 900 SERIES; 100 WATT AMPL - 1000 SERIES.
4. SELECTED FOR I_{DSS}
   - * I_{DSS} BETWEEN 2 MA & 14 MA
   - Δ I_{DSS} BETWEEN 9 MA & 14 MA (PAIR MATCHED WITHIN 1 MA OF EACH OTHER)
   - □ I_{DSS} BETWEEN 2 MA & 8 MA
   - o I_{DSS} BETWEEN 15 MA & 20 MA

ITEM	DWG. NO.	DESCRIPTION	REQ.	REMARKS
TOLERANCES & NOTES EXCEPT AS NOTED		SCHEMATIC DIAGRAM SS-15 SOLID STATE TRANSCEIVER		
DR. BY AJG 7/31/72		MATERIAL & SPEC. ~	FINISH & SPEC. ~	SCALE ~
CHKD. BY		SWAN ELECTRONICS CORP. 417 VIA DEL MONTE, OCEANSIDE, CALIFORNIA		SHEET ASSY.
APP. BY				
APP. BY				SH. OF REV.

TRANSMIT THE CLEANEST SIGNAL ON THE AIR

. . . with a New SWAN Fully Solid-State Transceiver!

You'll appreciate the comments about your signal. You'll get outstanding reports on your readability, strength and tone. Be a proud owner of a truly reliable all solid-state rig . . . at a price you can afford!

SWAN ELECTRONICS offers you superb craftsmanship you can see, feel, and hear. Inside, these units are uniquely designed. Progressive, proven engineering state-of-the-art techniques are enriched by the most practical advanced components available. Externally, Swan has designed these new transceivers to be appreciated by every ham, and the XYL, because it was hams who told us what they wanted. It's all here . . . up-to-the-minute in styling and convenience . . . easy to operate.

ENJOY CLEAR, CLEAN TRANSMISSIONS — The finest quality on the air. Signals are strong, stable and easy to read. Select from your choice of 3 models:

80-10 Meters, SSB, CW, VOX, NOISE BLANKER and a whole lot more!!

SWAN SS-15 (15 Watts P.E.P.) $579.00
SWAN SS-100 (100 Watts P.E.P.) $699.00
SWAN SS-200 (200 Watts P.E.P.) $779.00

ACCESSORIES INCLUDE:

SWAN PS-10 (115V AC power supply for SS-15/SS-100) . . . . . $ 89.00
SWAN PS-20 (115V AC power supply for SS-200/SS-100/SS-15) $139.00
SWAN SS-1200 (1200 Watt P.E.P., tube type, Linear Amplifier) $299.00
SWAN SS-208 (External VFO) $159.00
SWAN SS-16B (Super Selective Filter) . . . . . $ 79.95
SWAN 610X (Crystal Controlled Oscillator) . . . . . $ 53.95

Just 10% down is all that is needed, if you use your Swan Credit Service account, to put an all-solid-state rig in your ham shack. Why wait? Order yours now!!

SWAN ELECTRONICS
A subsidiary of Cubic Corporation

305 Airport Road • Oceanside, CA 92054 • Phone (714) 757-7525